TRAINING

Hopper™

TRAINING GUIDE

dish

Sponsored By

The Weather Channel®

weather.com

WHOLE-HOME DVR

Introducing the Hopper from DISH, an innovative new way to experience Whole-Home HD DVR service. DISH's Whole-Home HD DVR service gives you full DVR functionality on every TV, so you can pause, rewind, and record live TV in any room. Plus, access your DVR library from any TV, so you can record a show in one room and then watch it in another.

Hopper HD DVR: The Hopper is the hub for your Whole-Home TV entertainment. This 2 Terabyte HD DVR has 3 satellite tuners and provides full DVR functionality to the other TVs in your home through thin-client receivers called Joeys giving you a Whole-Home DVR network.

- With 3 tuners, you can watch or record up to 3 live HD programs at once- from any TV connected to your whole-home network.
- When PrimeTime Anytime™ is enabled, you can record all the big 4 networks in HD (ABC, CBS, NBC and FOX) during primetime on a single tuner, giving you the ability to record up to 6 programs during primetime hours in your area. (Please see page 4 for more details about PrimeTime Anytime.)
- When a second Hopper is added to your DVR network, it will expand your DVR recording capabilities to 6 live HD channels at once, 9 during primetime hours.
- The Hopper also features a massive 2 Terabyte hard drive that gives you over 250 hours of HD DVR recording and hundreds of On Demand titles for instant viewing.

The Hopper and Joey delivers full HD DVR service to any room in your home.

WHOLE-HOME DVR

Joey: The Joey is a thin-client receiver that communicates with the Hopper, giving you full HD DVR functionality on each of your TVs.

- Each Joey has the same TV user interface as the Hopper.
- A single Hopper can be configured with up to 3 Joeys (4 TVs).
- A two-Hopper solution can be configured with up to 4 Joeys (maximum of 6 TVs).
- Joeys can be installed on both HD and SD TVs, but the only SD video ouput connection is RCA composite video.

MoCA: Multimedia over Coaxial Alliance is the technology behind whole-home DVR that allows you to access a common DVR playlist from any connected TV in the Hopper's network. MoCA supports both HD and SD video in the home.

Configuration options:

- 1 Hopper with up to 3 Joeys (On the 4th TV you can mirror the programming from any of the other 3 TVs, watch a previously recorded program, or On Demand content).
- 2 Hoppers with up to 4 Joeys (maximum of 6 TVs).*

*At product launch, Joeys can only access the DVR features and tuners from one Hopper. The ability for two Hoppers to share DVR functionality and tuners will be available soon.

TV Everywhere: If your Hopper is broadband Internet-connected, you can add a Sling Adapter to the Hopper and enjoy TV Everywhere -- watch live TV and DVR recordings, and manage your DVR from your Internet-connected computer, tablet, or smartphone while you are on the go.

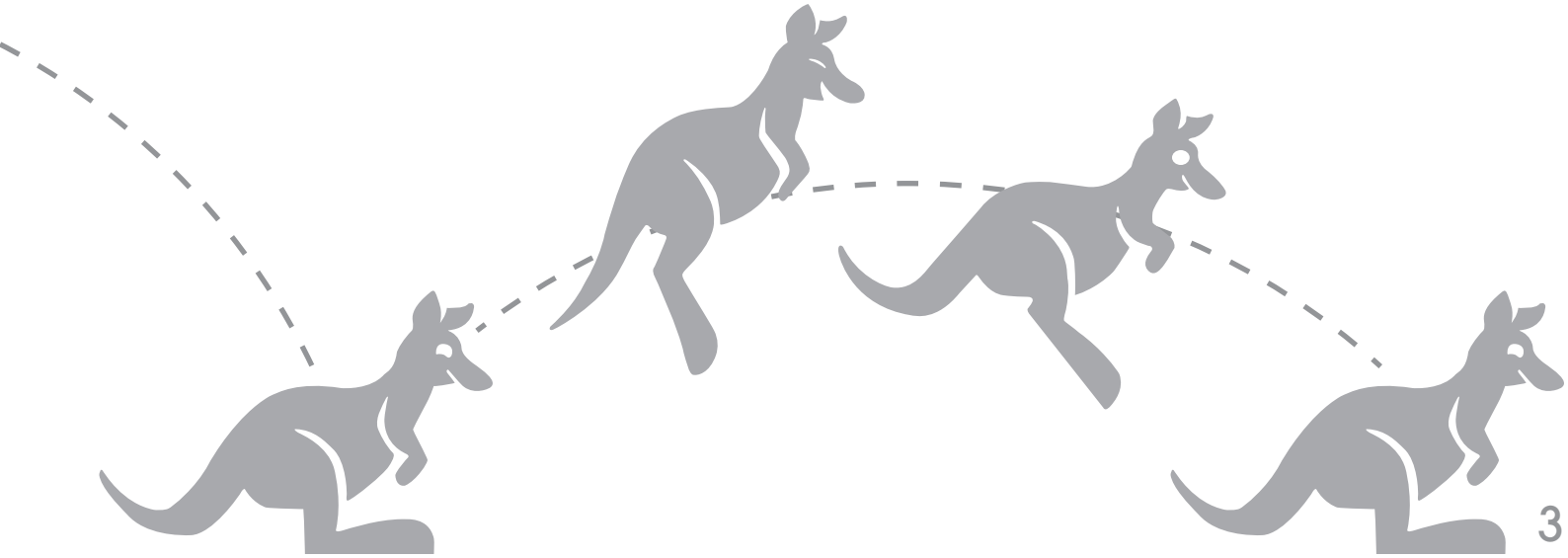

PRIMETIME ANYTIME™

The Hopper's exclusive feature, PrimeTime Anytime, gives you instant On Demand access to your favorite shows on ABC, CBS, FOX, and NBC in HD (where available).

PrimeTime Anytime is enabled using the main menu of the Hopper; it will automatically record all primetime programming from 8 to 11 PM ET Monday through Saturday, and from 7 to 11 PM ET on Sunday.*

Benefits:

- Three hours per night of HD primetime programming are available to you, on demand, for up to 8 days from initial air date.
- Record all 4 of the big networks in HD (ABC, CBS, FOX, and NBC) on a single tuner, reducing recording conflicts.
- Instant access to the best primetime programming without having to set timers.
- PrimeTime Anytime does not use your personal DVR hard drive space.
- You have the option to save your favorite on demand primetime content to your DVR before the 8 day window expires.

Select Menu on your remote and then select the PrimeTime Anytime tile.

To enable PrimeTime Anytime, select Enable and then select Save.

To view recorded PrimeTime Anytime content, select the DVR button on your remote and then select PrimeTime Anytime.

*PrimeTime Anytime is only available in markets with HD locals.

BLOCKBUSTER @HOME

Over 100,000 movies, TV shows, and video games by mail

Access to new-release movies and TV show titles earlier than Netflix® or Redbox®.

Unlimited in-store exchanges

In-store exchanges require a Blockbuster @Home disc and envelope. When an in-store exchange rental is returned to the store, the next title in your Blockbuster @Home queue will be mailed to you.

Access to thousands of movies and TV episodes online at no additional charge

Up to 5 users can simultaneously access thousands of TV shows and movies online through DISH Online.

Stream thousands of On Demand movies to your TV *with* broadband Internet connectivity

Stream hundreds of On Demand movies to your TV *without* broadband Internet connectivity.

BLOCKBUSTER @HOME™

Plus over 20 great channels*

Logo™ · starz CINEMA · VELOCITY by Discovery · PixL · centric™ · ci HD crime&investigation network · epix · epix2 · epix3 · encore suspense · HDNET MOVIES · palladia HD EPIC. AWESOME. MUSIC. · sundance CHANNEL · MGM HD · mavTV HD · retroplex · indieplex HD · movieplex · SONY MOVIE CHANNEL · WFN WORLD FISHING NETWORK™ · Hallmark MOVIE CHANNEL · UNIVERSAL HD

*These channels are subject to change.
For the most up-to-date channel information, go to dish.com/blockbusterathome.

REMOTE CONTROL

Model 40.0 Remote

The new model 40.0 remote has the following features:

- 200 ft. range
- Uses UHF/RF to communicate with the Hopper or Joey- your receiver doesn't need to be in sight
- A universal learning system wizard for pairing with other devices such as your TV, DVD, and audio receiver
- IR capabilities to control your TV, DVR, and audio receiver
- An alarm that allows you to quickly locate your remote: use the 'Locate Remote' button on the Hopper or Joey to sound the remote's alarm.

To quickly pair your remote to your receiver, press the "System Info" button on the front of your receiver, then press the "Pair" button on the remote.

The buttons are white, making them easier to view in low-light conditions.

While viewing TV, use the colored shortcut buttons to get to what you need quickly.

Blue: Network Settings
Yellow: System Settings
Green: Quick Clicks list- create a list of your favorite channels for fast access
Red: TV Viewing Status- start watching a program in one room and continue watching in another room

TV Viewing Status Screen

While viewing the Guide, use the blue button to expand collapsible menus, such as SiriusXM and international channels.

Sirius Menu, Collapsed

ADDITIONAL FEATURES

FEATURE	BENEFIT
Start watching in one room, finish in another	Pause your show in one room then go to another room and press the red button on your remote to access the TV Viewing Status screen. Select the show you would like to continue watching.
State-of-the-Art User Interface (UI)	• Tile-based user interface (like the ViP® 922). • Displays 3-hour blocks of programming on a single screen. • Listing of channel logos.
Predictive Search	• Quickly find listings for your favorite programs on live TV, VOD, or your DVR. • Results automatically appear in poster art as you begin typing, making it easier for you to quickly identify content.
SRS TruVolume	Prevents annoying volume fluctuations between programming and commercials. DISH is the first to offer TruVolume in its set-top boxes.
Remote Control Locator	The Hopper and the Joey have a "Locate Remote" button on their front panels that activates an alarm on your remote so you can locate it quickly.
SiriusXM and Pandora Radio	• 73 channels of SiriusXM satellite radio (channel 99) are available to customers with eligible programming packages. • The Pandora radio set-top box app is only offered by DISH.
Program Guide Length	View up to 9 days of programming through your program guide.
DishONLINE (IPVOD)	When the Hopper is broadband Internet-connected, you will have access to thousands of On Demand titles.
3D	The Hopper will carry multiple 3D VOD titles at-a-time.

Hopper™

ADDITIONAL FEATURES

FEATURE	BENEFIT
DISH On Demand (VOD)	Immediately order and begin viewing hundreds of On Demand titles, including new releases. Titles are stored on the Hopper's hard drive so there is no need to wait for downloading.
Massive 2 Terabyte Hard Drive	• 250 hours of HD program recording capacity. • Hundreds of titles will be available on the hard drive for instant viewing. • Customers also have the option to add an external hard drive for a larger DVR recording capacity.
Picture-in-Picture (Hopper only)	Watch two programs on a single TV screen: one on the full screen and one in the inset window (two tuners must be available for PIP).
Apps	With the Weather Channel, msnbc, NBC Sports and Access Hollywood apps, you're just a click away from the information you want.
Parental Controls	You don't need to worry about your kids flipping through channels in the other rooms; use parental controls on any TV to lock inappropriate content with a password.
TV Everywhere	• The Hopper is compatible with the Sling Adapter. • With a Sling Adapter and a broadband Internet-connected Hopper, you can watch your live programming and DVR content, and set and manage DVR recordings from your laptop, tablet, or smartphone while you are on-the-go. • No other pay-TV service provider offers this capability.
DISH Unplugged	When you subscribe to premiums, such as Blockbuster @Home, HBO, or EPIX, hundreds of on demand titles are pre-downloaded to your hard drive for instant viewing; no broadband connection is required.

SPECS

Spec	Hopper	Joey
Number of Satellite Tuners	**3**	**Shares Hopper's tuners**
Hard Drive Size	2 Terabyte hard drive	Shares content from Hopper's hard drive
MoCA	MoCA 1.1	MoCA 1.1
Video Resolution	MPEG4, MPEG2 (480i, 480p, 720p, 1080i, 1080p24)	MPEG4, MPEG2 (480i, 480p, 720p, 1080i, 1080p24)
3D Compatible	Half-rate side-by-side 1920 x 1080p24	Half-rate side-by-side 1920 x 1080p24
Front Control Buttons	12 button panel (power, sys info, up, down, left, right, select, info, menu, jump, reset and locate remote)	6 button panel (power, sys info, up, down, select, and locate remote)
Smartcard Slot	Yes (pre-loaded with card)	No
SimCard Slot	No	Yes
Bluetooth Radio	Yes	No
Reset Button	Yes	No (hold power to reset)
Recording Indicator Light	Yes	No
Flash Memory	64MB	64MB
RAM Memory	768MB	512MB
Processor	Broadcomm 7420, 750 MHz	Broadcomm 7340, 405 MHz
CPU DMIPs	1700 DMIPs	1100 DMIPs
Home Media Formats	Video Playback: MKV & MP4; Music: MP3; Images: JPG	Video Playback: MKV & MP4; Music: MP3; Images: JPG

Hopper - Size: 16"W x 2.05"H x 11"D - Weight: 8 lbs

Joey - Size: 6.62"W x 1.69"H x 5.27"D - Weight: .7 lbs

Spec	Hopper	Joey
USB 2.0 Port	Yes (3)	Yes (1)*
RCA Composite A/V	Yes	Yes
HDMI 1.3 Port	Yes	Yes
S/PDIF Optical Digital Audio	Yes	Yes
YPrPb Component Video	Yes	No
F-Coaxial Port	1 (Satellite/MoCA)	1 (MoCA - Home Video Network)
Phone-line Port	1	0
Ethernet Port 10/100 BaseT	2	1
Remote Antenna Coaxial Port	1	0 (UHF antenna is internal)

*Joey USB port will not be functional on product launch

INSTALLATION **COMPONENTS**

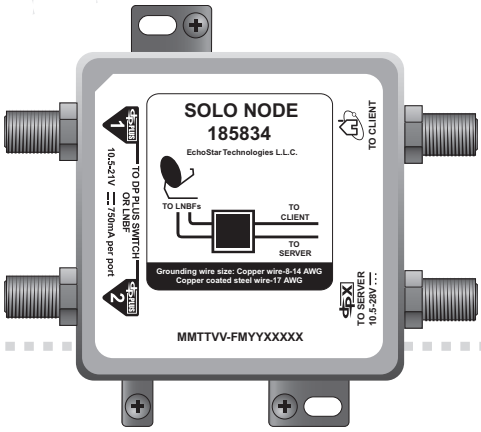

Solo Node: A connection point used between the DISH antenna and a single Hopper installation configuration.

Duo Node: A connection point used between the DISH antenna and a dual Hopper installation configuration.

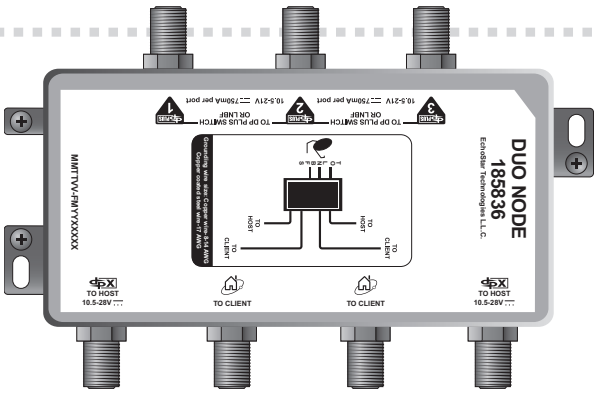

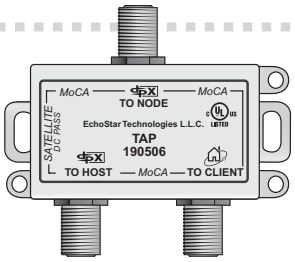

Tap: A splitter-type device used to tap into the satellite feed for a Hopper (Host) and then split the connection between the Hopper (Host) and a Joey (Client) or HIC (Hopper Internet Connector).

2-way or 3-way Splitter: A device used to split the Client connection between 2 or 3 Joeys, or a HIC.

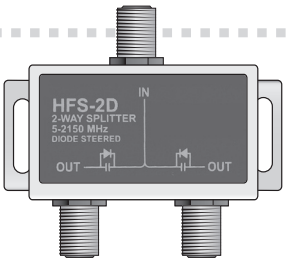

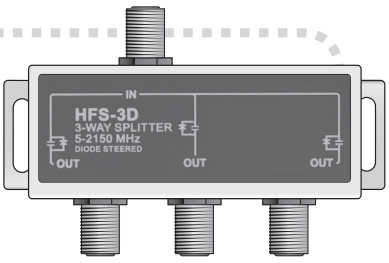

Isolator: A splitter-type device used to isolate a subnet of Hopper and Joeys from a second subnet of Hopper and Joeys on an installation. This splits the home's video network and prevents DVR sharing outside of the subnet.

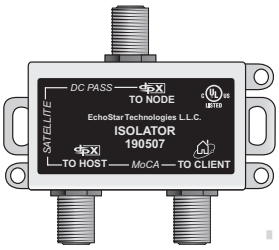

INSTALLATION **CONFIGURATIONS**

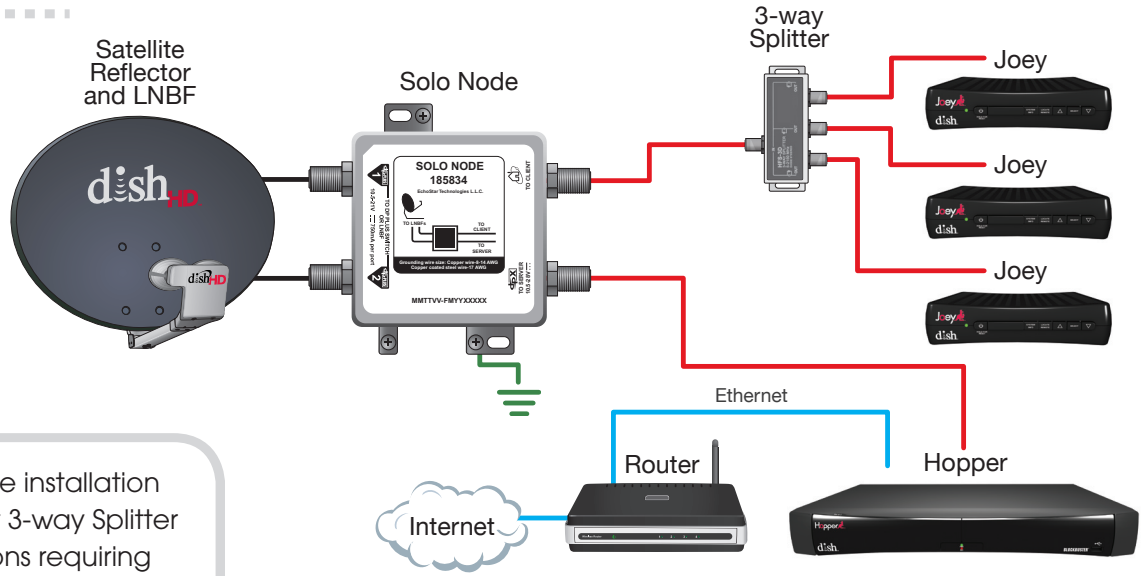

A Solo Node is used for the installation of a single Hopper. A 2 or 3-way Splitter can be used for installations requiring 2 or 3 Joeys (this configuration uses a 3-way Splitter to install 3 Joeys).

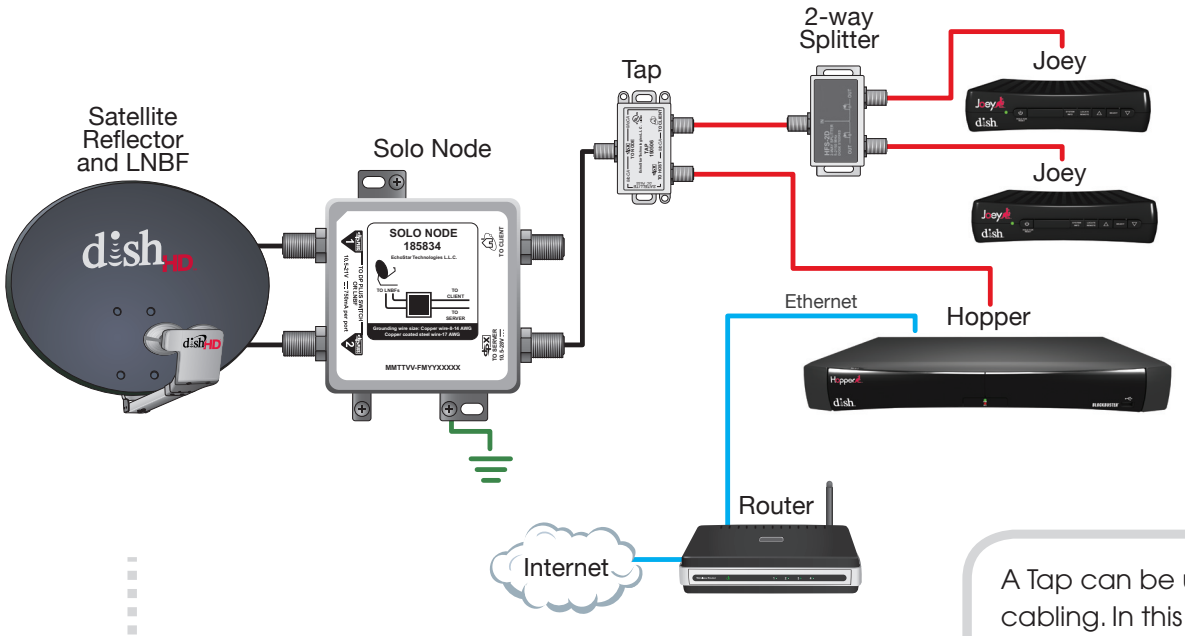

A Tap can be used to minimize cabling. In this example, a Solo Node, a Tap, and a 2-way Splitter are used for the installation of a single Hopper and 2 Joeys.

INSTALLATION **CONFIGURATIONS**

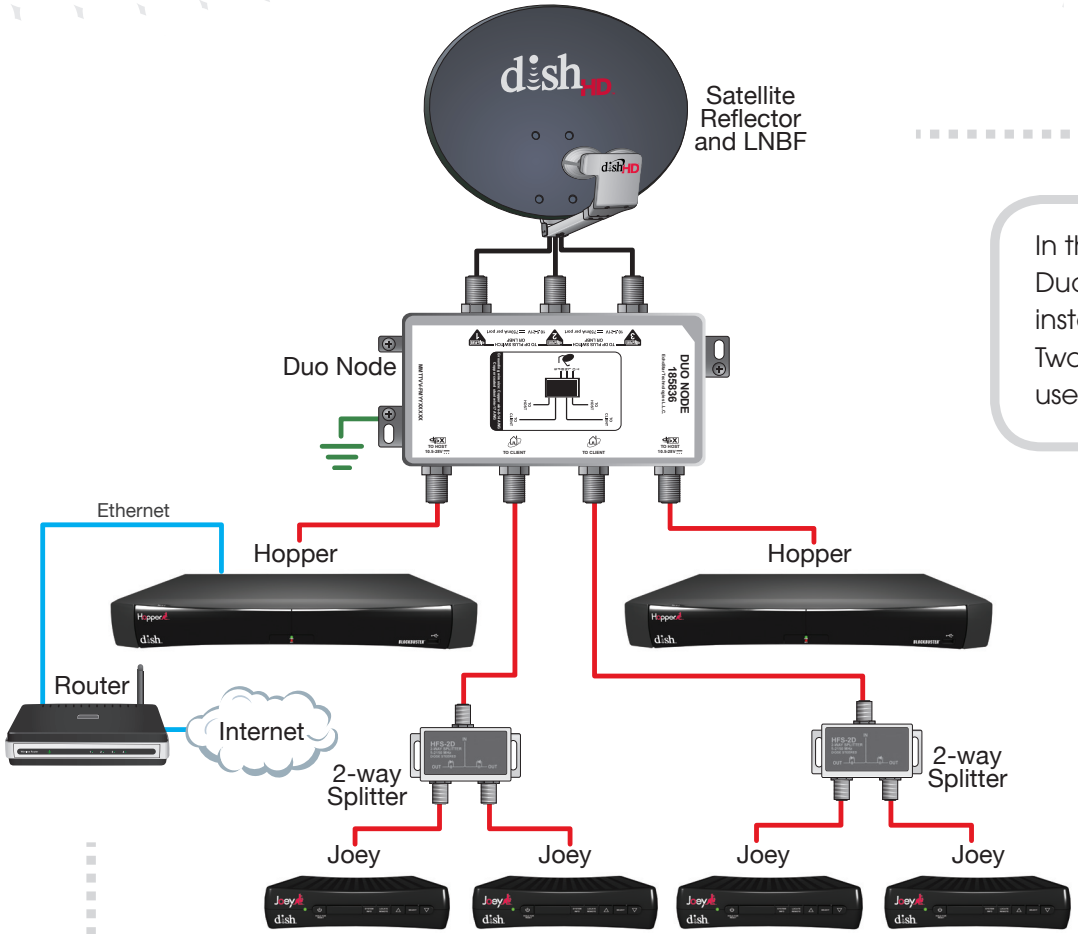

In this configuration, a Duo Node is used for the installation of two Hoppers. Two 2-way splitters are used to install 4 Joeys.

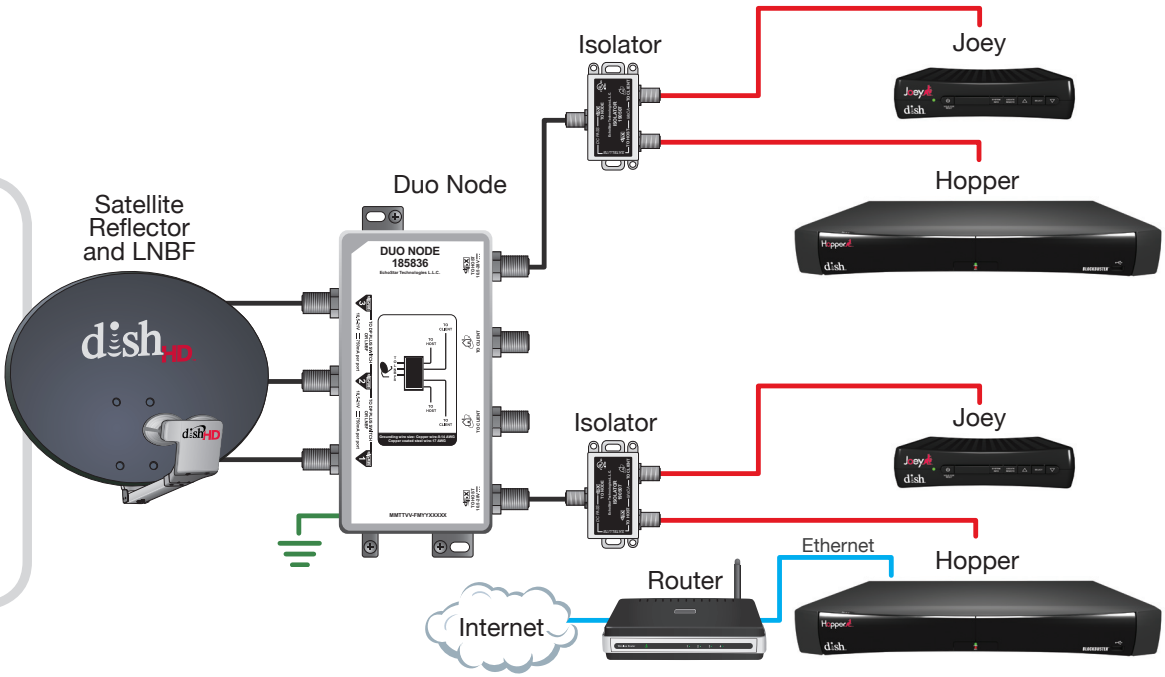

In this configuration, a Duo Node is used for the installation of two Hoppers. Adding Isolators will separate the Hoppers/Joeys into their own networks (subnets), which will prevent DVR sharing.

INSTALLATION **CONNECTIVITY**

Connect your receiver to your home's broadband Internet service to expand your benefits as a DISH subscriber. Benefits of broadband connectivity include:

- Instant access to thousands of on demand movies and television shows
- Order Pay-Per-View movies and events using your remote
- Manage your DVR from your smartphone, tablet, or computer
- TV Everywhere: plug a Sling Adapter into your Hopper and start watching live or recorded shows from your Internet-connected computer or mobile device
- Stream thousands of movies to your TV

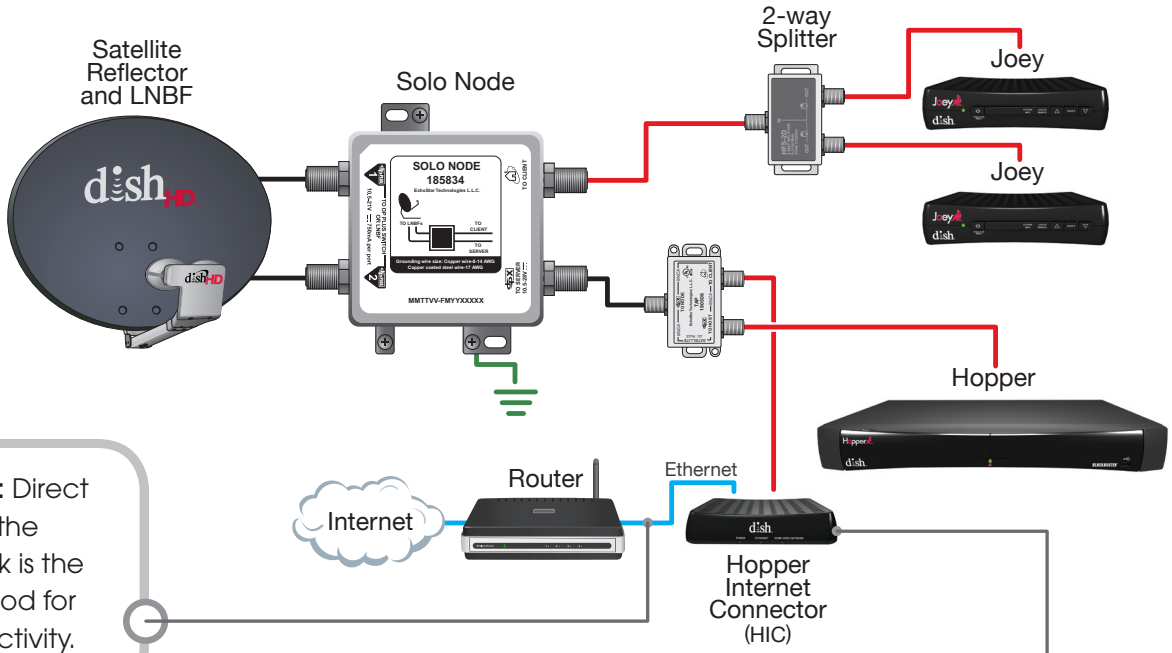

Ethernet Cable: Direct connection to the home's network is the preferred method for Internet connectivity.

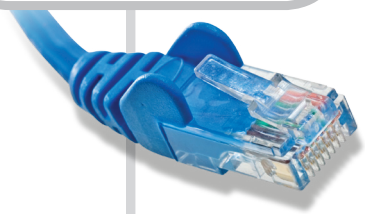

Hopper Internet Connector (HIC): A device that enables Internet connectivity to Hopper and Joeys through coaxial cable (MoCA); a HIC may be used when the Hopper cannot be connected directly to Ethernet or when the use of the USB WiFi Adapter does not offer a strong Internet communication link at the Hopper. The HIC can be installed throughout the coaxial cabling in the home that is used to create the whole-home DVR network.

Wireless Adapter: A device that plugs into the USB port on the Hopper and uses the home's wireless network. Only one wireless adapter is needed on the Hopper network.

CUSTOMER SCENARIO

Customer Scenario - The Wilsons

Read the following customer scenario and then use the Customer Estimate Sheet to calculate the Wilson's total upfront and monthly costs.

CUSTOMER: *The Wilsons "Whole-Home DVR"*

TVs: *3 HDTVs*

HD: *HD programming on all 3 TVs*

DVR: *Full DVR service on all 3 HDTVs*

FAVORITE CHANNELS: *ABC, CBS, NBC, FOX, ESPN, FX, HGTV, Food Network, SiriusXM, History, CNN, and Animal Planet*

BLOCKBUSTER @HOME: *Yes*

AUTOPAY AND PAPERLESS BILLING: *Yes*

Use the Customer Estimate Sheet to calculate the customer's total upfront and monthly costs.

Customer Estimate Sheet | Hopper/Joey

Programming

Monthly Charges

Programming	DishFAMILY	America's Top 120	America's Top 120+	America's Top 200	America's Top 250	America's Everything Pak
	$24.99/mo	$44.99/mo	$49.99/mo	$59.99/mo	$69.99/mo	$104.99/mo
	NA	HD Free for Life*				

DishLATINO	DishLATINO Básico	DishLATINO Clásico	DishLATINO Plus	DishLATINO Dos	DishLATINO Max
	$22.99/mo	$32.99/mo	$37.99/mo	$44.99/mo	$57.99/mo
	NA		HD Free for Life*		

DISH America	DISH America	DISH America Silver	DISH America Gold
	$34.99/mo	$49.99/mo	$59.99/mo

* Requires 24-month Agreement and AutoPay with Paperless Billing OR $99 One-Time HD Programming Upgrade.

$_____ Programming Package

Add-Ons

Premium Packages				Save Money w/ Multiple Premiums	Additional Services	
HBO	$16	Showtime	$13	Any 2 movie packages.....$26/mo	Blockbuster @Home (1 disc at a time)	$10/mo
Starz	$13	Cinemax	$13	Any 3 movie packages.....$35/mo All 4 movie packages.....$44/mo	DishLATINO Bonus Pack (Add to America's Top Pkg)	$15/mo

$_____ Add-Ons

	Hopper	Joey	Addtional Fees			Receiver Upgrade Cost[3]
			Name	Fee	Total	DHA
1 TV	1	0	DVR Fee: Whole-Home HD DVR Service:	$6/mo $4/mo	$10/mo	$0
2 TVs	1	1	DVR Fee: Whole-Home HD DVR Service: Outlet Fee:	$6/mo $4/mo $7/mo	$17/mo	$0
3 TVs	1	2	DVR Fee: Whole-Home HD DVR Service: Outlet Fees:	$6/mo $4/mo $14/mo	$24/mo	$0
4 TVs	1	3	DVR Fee: Whole-Home HD DVR Service: Outlet Fees:	$6/mo $4/mo $21/mo	$31/mo	$0
4 TVs	2*	2	DVR Fee: Whole-Home HD DVR Service: Outlet Fees:	$6/mo $4/mo $21/mo	$31/mo	$199
5 TVs	2*	3	DVR Fee: Whole-Home HD DVR Service: Outlet Fees:	$6/mo $4/mo $28/mo	$38/mo	$199
6 TVs	2*	4	DVR Fee: Whole-Home HD DVR Service: Outlet Fees:	$6/mo $4/mo $35/mo	$45/mo	$298

$_____ Additional Fees

***At product launch, Hoppers will not be able to communicate with each other but this functionality is an upcoming feature.**

Fees explained

DVR Fee **$6/mo**
Whole Home DVR Service **$4/mo**
Outlet Fee per Joey **$7/mo**
Additional Hopper Outlet Fee **$7/mo**

$_____	$_____	$_____	$_____	$_____
Upfront leased receiver fee[1]	**Activation fee[2]**	**Receiver upgrade cost**	**Total Monthly Price with Offers[3]**	**Total Monthly Price**

Check Customer Expectations

- ❑ [1]$99 DHA/DHA24 Upfront Leased Receiver Fee
  (fee will be credited back if customer subscribes to AT200, AT250, America's "Everything" Pak, DishLATINO Dos, or DishLATINO Max)
- ❑ [2]$99 Activation Fee for DHA
- ❑ Credit Card required for DHA24/DHA
- ❑ $420 Cancellation Fee (prorated at $17.50/mo.) for DHA24
- ❑ $240 Cancellation Fee (prorated at $10/mo.) for HD Free for Life
- ❑ Eligible Offers:
  - [3]Monthly Programming Credit for 12 months
    - **$30:** AT 250, America's "Everything" Pak
    - **$18:** DishLATINO Max
    - **$10:** DishLATINO Clásico, All DISH America
    - **$25:** AT 200
    - **$15:** AT 120, AT 120+, DishLATINO Plus, Dos
    - **$5:** DishFAMILY
  - HBO, Cinemax, Showtime, and Starz Free for 3 Months
  - Blockbuster @Home Included for 3 months
  - Protection Plan Free for 4 Months
  - [4]HD Free for Life

3. Includes upfront and online bonus credits. 12 month period of online bonus credits begins after your DISH account has been activated and the offer has been redeemed at mydish.com/myaccount. Requires a 24-month Agreement, AutoPay with Paperless Billing, and opting in to receive marketing emails from DISH.
4. Requires a 24-month Agreement and AutoPay with Paperless Billing.

Local and state sales taxes may apply. HD programming available with select packages only. $10/mo HD add-on fee waived for life of current account. Programming offers require participation in qualifying promotion and subscription to qualifying programming. After applicable promotional periods, customer must call to determine continuation of subscriptions. Some promotions require all payments to be made in advance, including monthly programming, pay-per-view (prior to event), equipment upgrades and other one-time charges. Offers end 5/20/12; new and qualified DISH Network customers only. All prices, packages and programming subject to change without notice. HBO®, Cinemax® and related channels and service marks are the property of Home Box Office, Inc. SHOWTIME and related marks are registered trademarks of Showtime Networks Inc., a CBS Company. STARZ and related channels and service marks are the property of Starz Entertainment, LLC.

DISH, DISH Network, and DISH Network logos are registered trademarks and/or service marks of DISH Network L.L.C. and/or its affiliate(s). The DISH Network trademarks and/or service marks are used by authority of DISH Network L.L.C. and/or its applicable affiliates(s).

NOTES